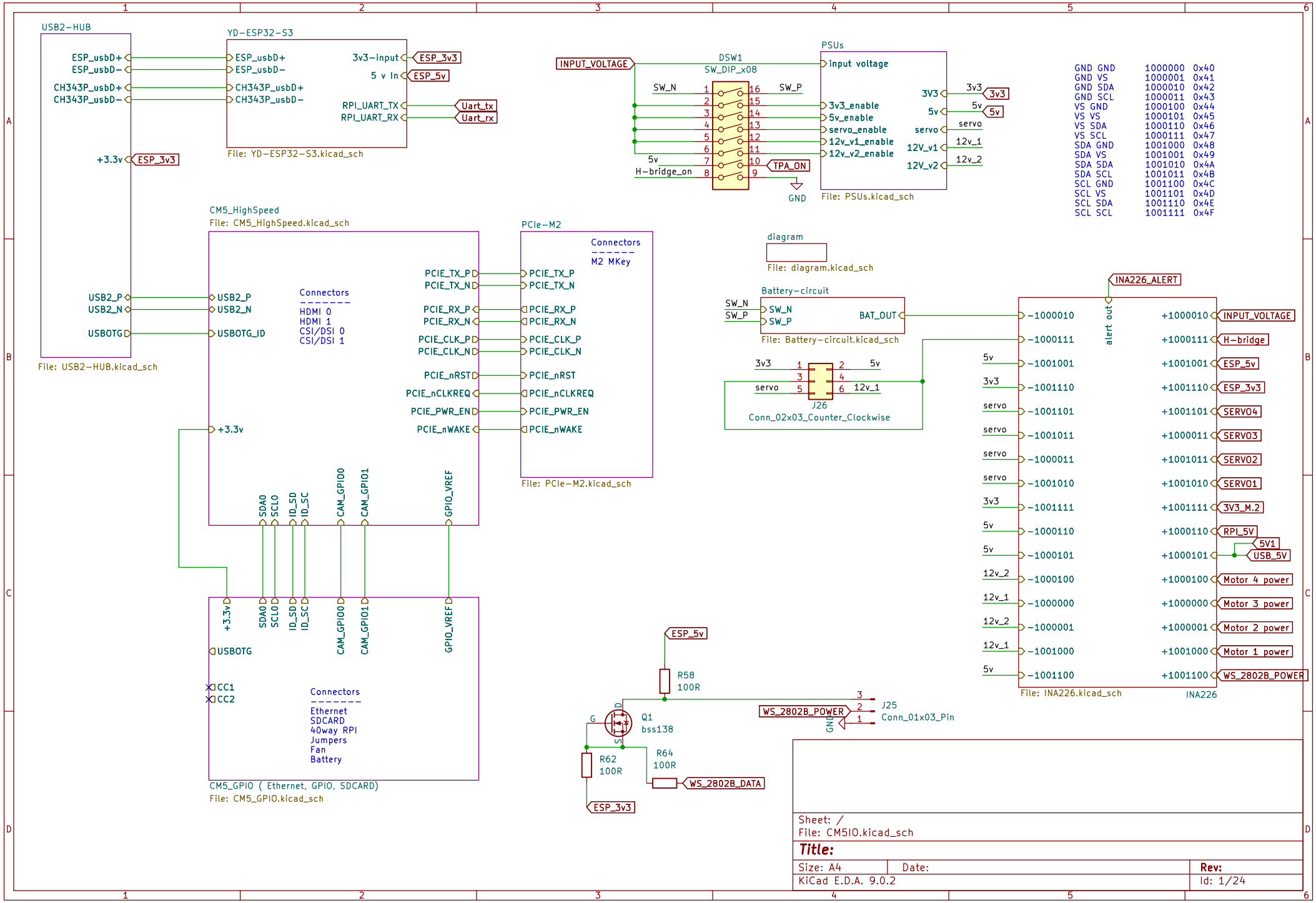
USB2-HUB
ESP_usbD+
ESP_usbD-
CH343P_usbD+
CH343P_usbD-
+3.3v
ESP_3v3
USB2_P
USB2_N
USBOTG
File: USB2-HUB.kicad_sch
YD-ESP32-S3
3v3-input
5 v In
RPI_UART_TX
RPI_UART_RX
Uart_tx
Uart_rx
File: YD-ESP32-S3.kicad_sch
INPUT_VOLTAGE
DSW1
SW_DIP_x08
SW_N
SW_P
5v
H-bridge_on
TPA_ON
GND
PSUs
input voltage
3v3_enable
5v_enable
servo_enable
12v_v1_enable
12v_v2_enable
3V3
5v
servo
12V_v1
12V_v2
3v3
12v_1
12v_2
File: PSUs.kicad_sch
GND GND 1000000 0x40
GND VS 1000001 0x41
GND SDA 1000010 0x42
GND SCL 1000011 0x43
VS GND 1000100 0x44
VS VS 1000101 0x45
VS SDA 1000110 0x46
VS SCL 1000111 0x47
SDA GND 1001000 0x48
SDA VS 1001001 0x49
SDA SDA 1001010 0x4A
SDA SCL 1001011 0x4B
SCL GND 1001100 0x4C
SCL VS 1001101 0x4D
SCL SDA 1001110 0x4E
SCL SCL 1001111 0x4F
CM5_HighSpeed
File: CM5_HighSpeed.kicad_sch
USB2_P
USB2_N
USBOTG_ID
+3.3v
Connectors
HDMI 0
HDMI 1
CSI/DSI 0
CSI/DSI 1
PCIE_TX_P
PCIE_TX_N
PCIE_RX_P
PCIE_RX_N
PCIE_CLK_P
PCIE_CLK_N
PCIE_nRST
PCIE_nCLKREQ
PCIE_PWR_EN
PCIE_nWAKE
PCIe-M2
Connectors
M2 MKey
File: PCIe-M2.kicad_sch
SDA0
SCL0
ID_SD
ID_SC
CAM_GPIO0
CAM_GPIO1
GPIO_VREF
+3.3v
USBOTG
CC1
CC2
Connectors
Ethernet
SDCARD
40way RPI
Jumpers
Fan
Battery
CM5_GPIO (Ethernet, GPIO, SDCARD)
File: CM5_GPIO.kicad_sch
diagram
File: diagram.kicad_sch
Battery-circuit
SW_N
SW_P
BAT_OUT
File: Battery-circuit.kicad_sch
3v3
5v
servo
12v_1
J26
Conn_02x03_Counter_Clockwise
INA226_ALERT
alert out
-1000010
-1000111
-1001001
-1001110
-1001101
-1001011
-1000011
-1001010
-1001111
-1000110
-1000101
-1000100
-1000000
-1000001
-1001000
-1001100
+1000010
+1000111
+1001001
+1001110
+1001101
+1000011
+1001011
+1001010
+1001111
+1000110
+1000101
+1000100
+1000000
+1000001
+1001000
+1001100
INPUT_VOLTAGE
H-bridge
ESP_5v
ESP_3v3
SERVO4
SERVO3
SERVO2
SERVO1
3V3_M.2
RPI_5V
5V1
USB_5V
Motor 4 power
Motor 3 power
Motor 2 power
Motor 1 power
WS_2802B_POWER
File: INA226.kicad_sch
INA226
ESP_5v
R58
100R
Q1
bss138
G
D
S
R62
100R
R64
100R
WS_2802B_DATA
ESP_3v3
WS_2802B_POWER
GND
J25
Conn_01x03_Pin
Sheet: /
File: CM5IO.kicad_sch
Title:
Size: A4
Date:
Rev:
KiCad E.D.A. 9.0.2
Id: 1/24

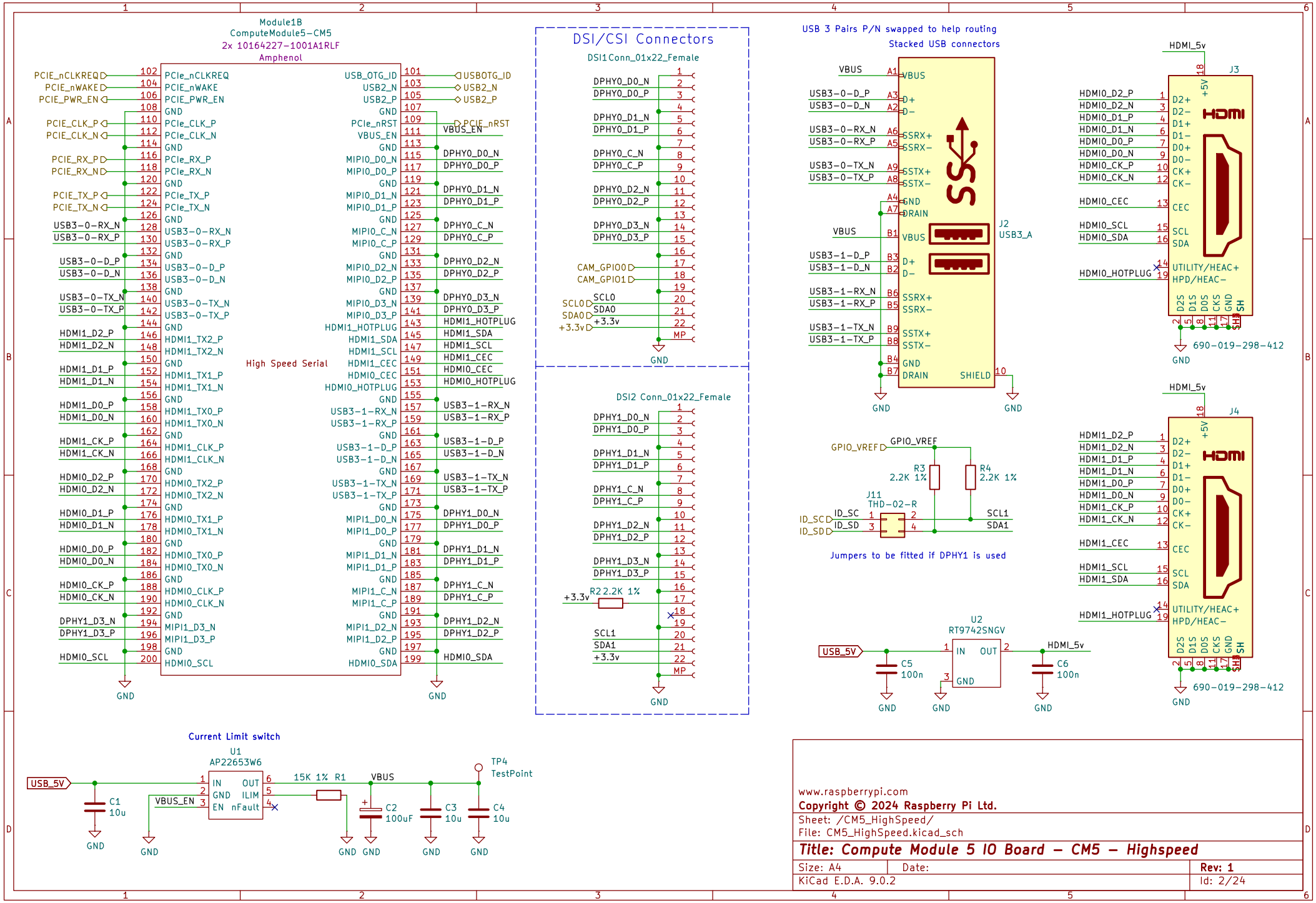

www.raspberrypi.com
Copyright © 2024 Raspberry Pi Ltd.

Sheet: /CM5_HighSpeed/
File: CM5_HighSpeed.kicad_sch

Title: Compute Module 5 IO Board – CM5 – Highspeed

Size: A4	Date:	Rev: 1
KiCad E.D.A. 9.0.2		Id: 2/24

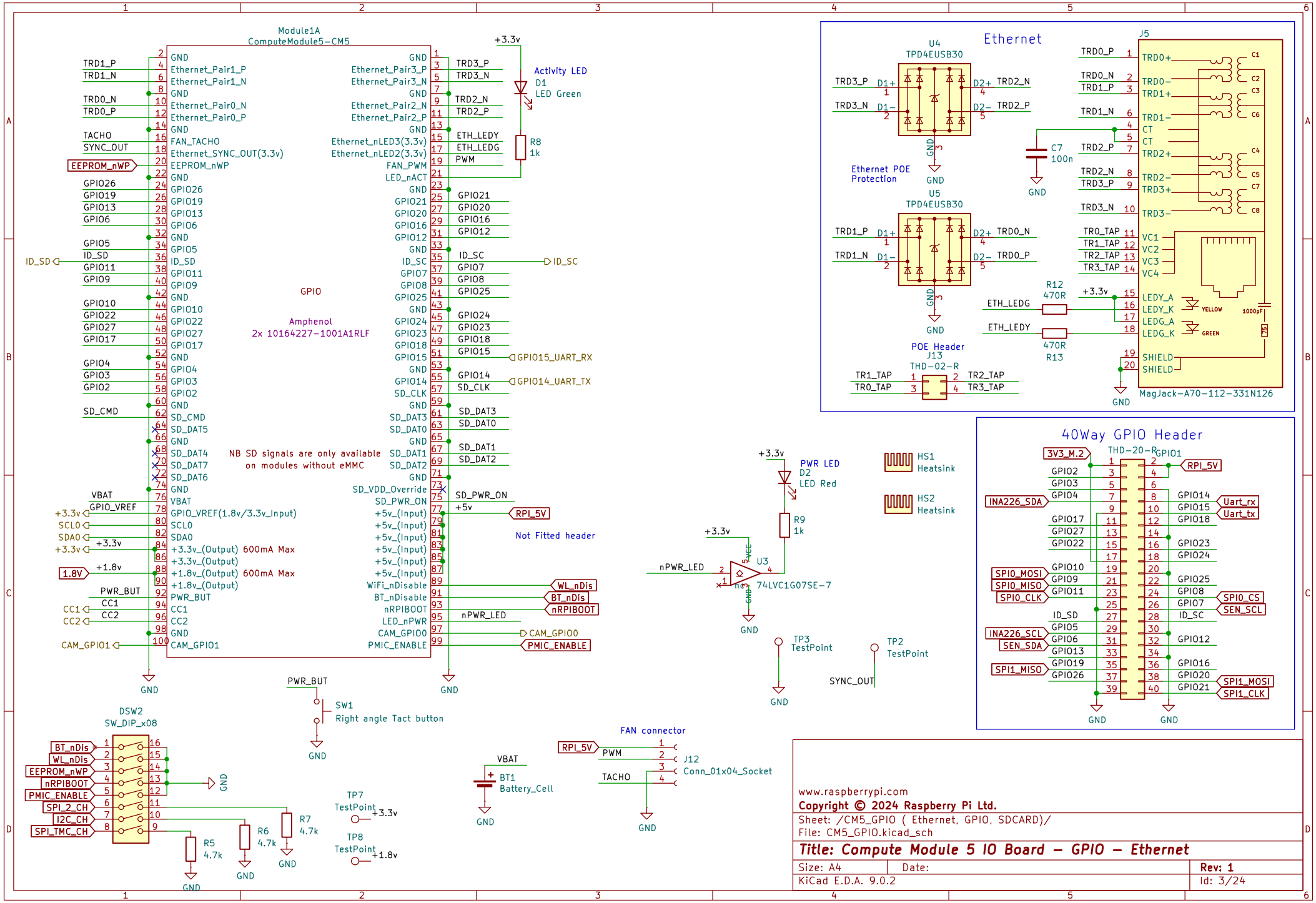

www.raspberrypi.com

Copyright © 2024 Raspberry Pi Ltd.

Sheet: /CM5_GPIO (Ethernet, GPIO, SDCARD)/

File: CM5_GPIO.kicad_sch

Title: Compute Module 5 IO Board – GPIO – Ethernet

Size: A4	Date:	**Rev: 1**
KiCad E.D.A. 9.0.2		Id: 3/24

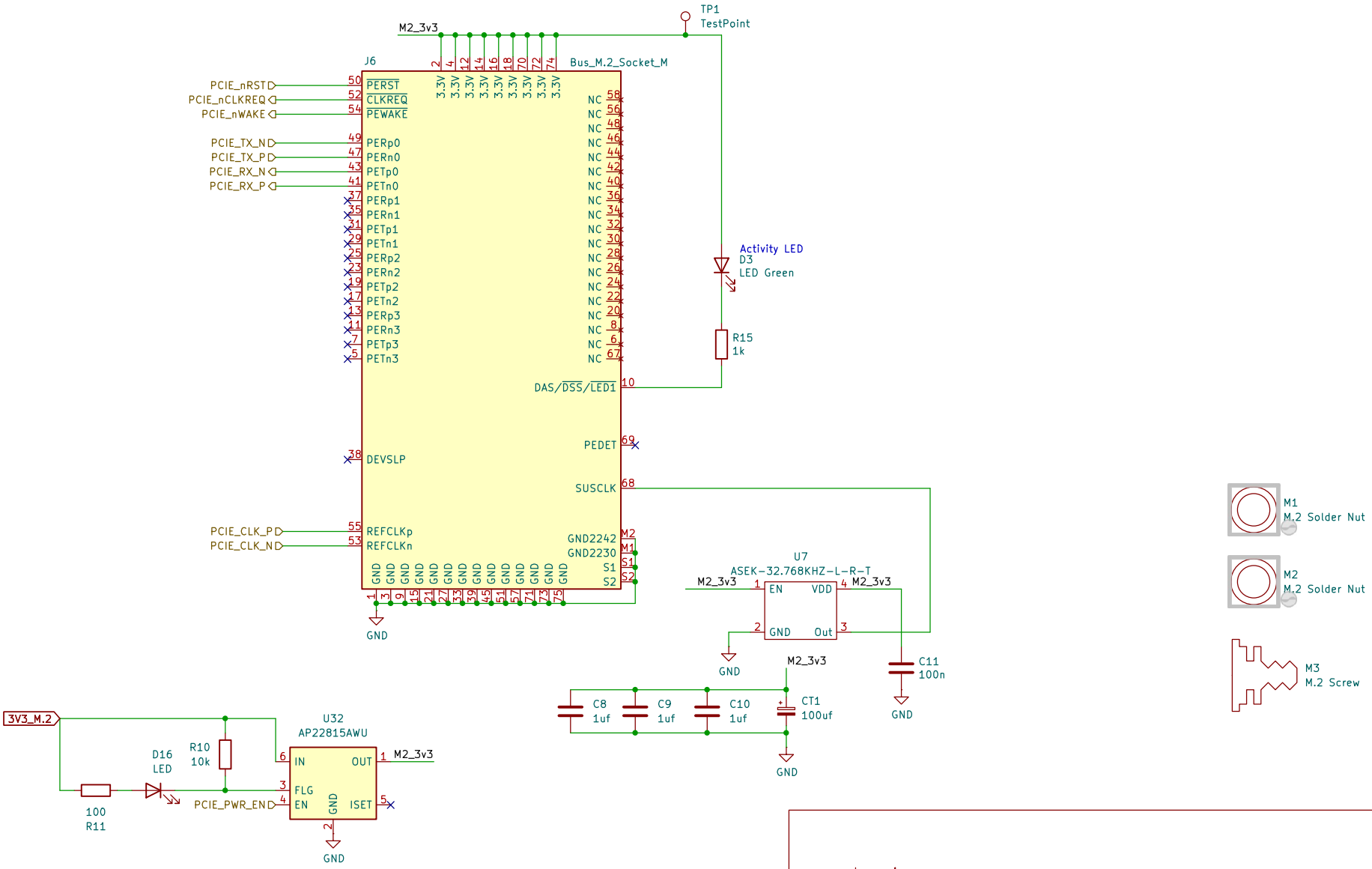

www.raspberrypi.com

Copyright © 2024 Raspberry Pi Ltd.

Sheet: /PCIe-M2/
File: PCIe-M2.kicad_sch

Title: Compute Module 5 IO Board – M2 Socket

Size: A4	Date:	**Rev: 1**
KiCad E.D.A. 9.0.2		Id: 4/24

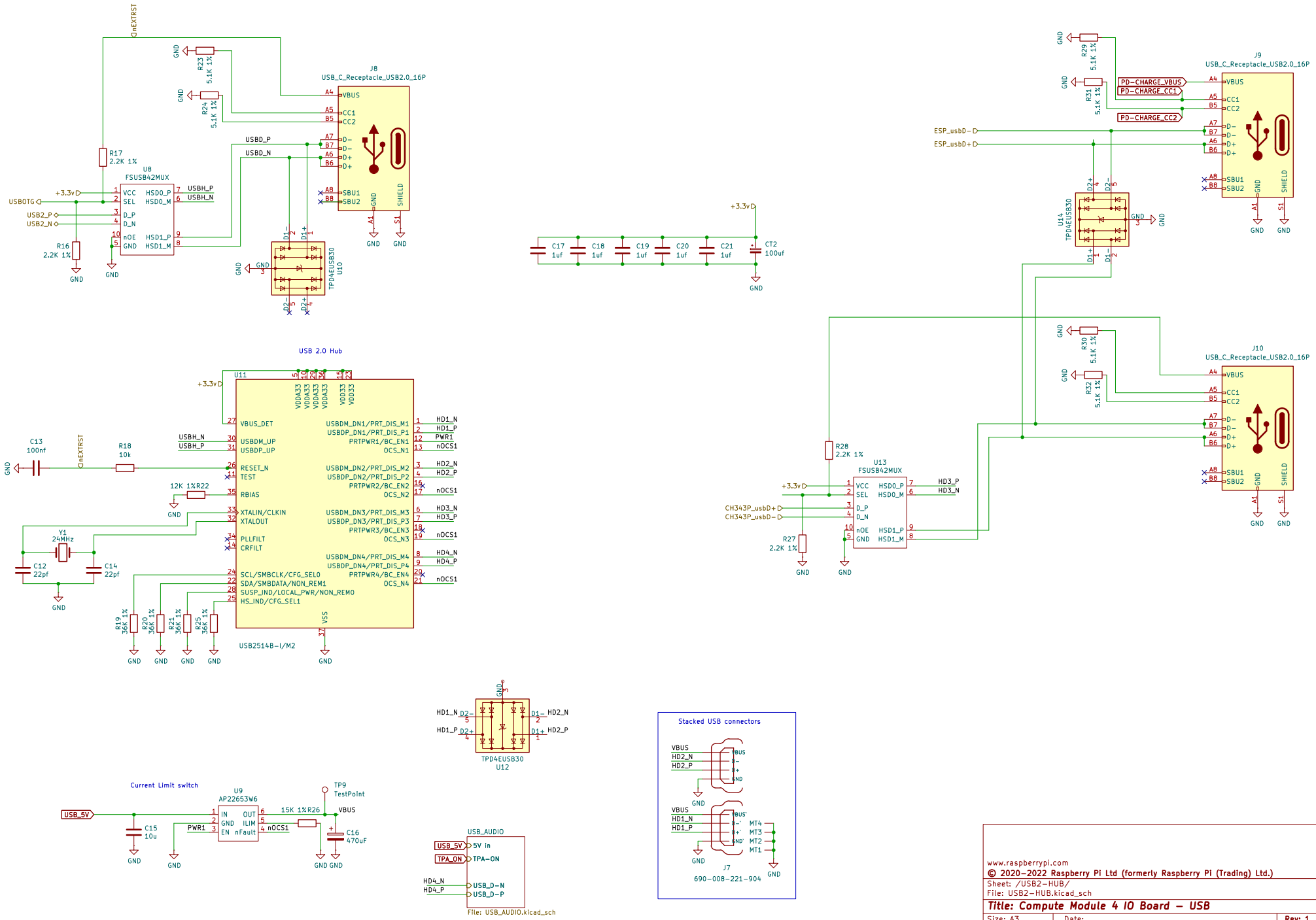

www.raspberrypi.com

© 2020-2022 Raspberry Pi Ltd (formerly Raspberry Pi (Trading) Ltd.)

Sheet: /USB2-HUB/
File: USB2-HUB.kicad_sch

Title: Compute Module 4 IO Board - USB

Size: A3	Date:	Rev: 1
KiCad E.D.A. 9.0.2		Id: 5/24

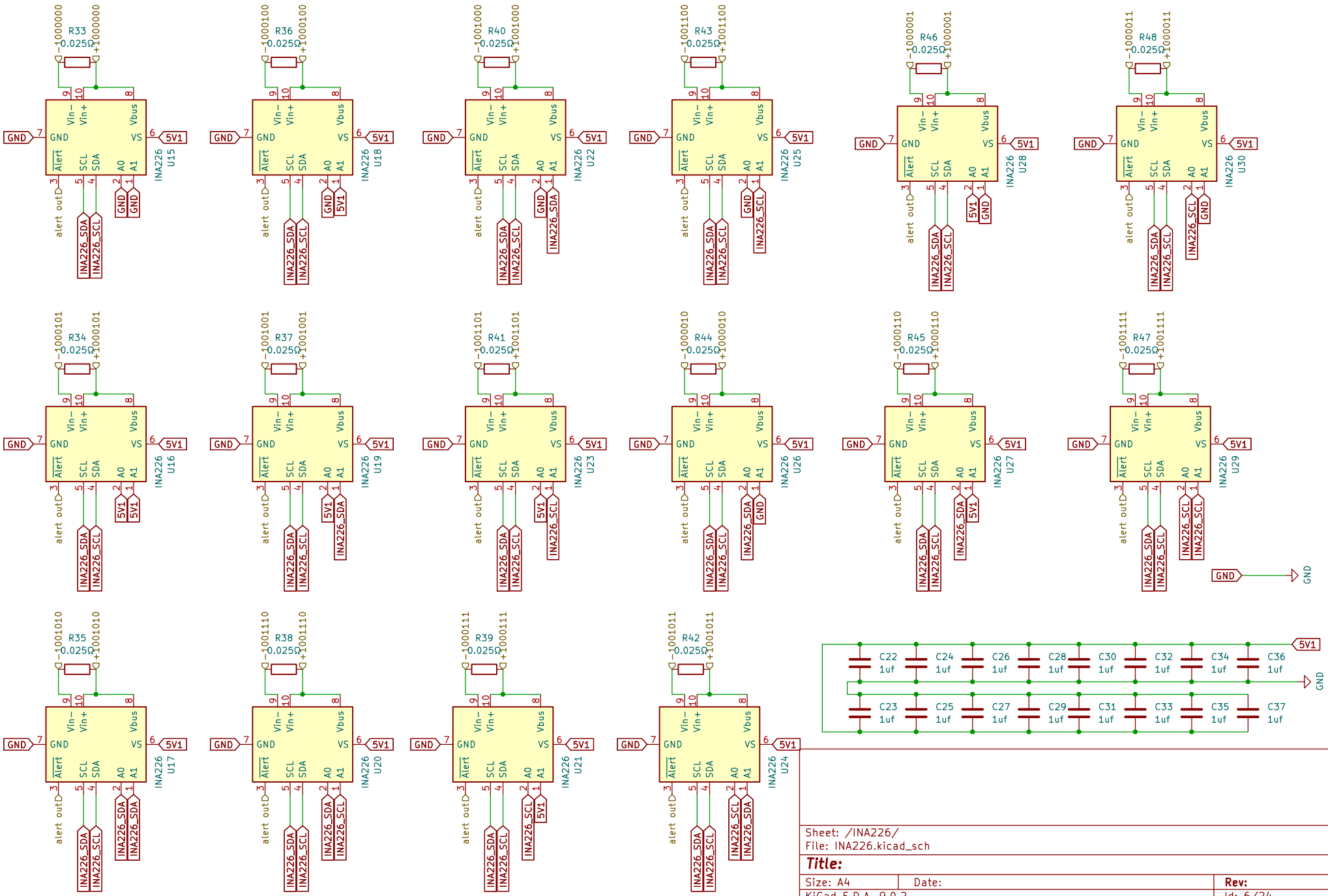

Sheet: /INA226/
File: INA226.kicad_sch

Title:

Size: A4	Date:	Rev:
KiCad E.D.A. 9.0.2		Id: 6/24

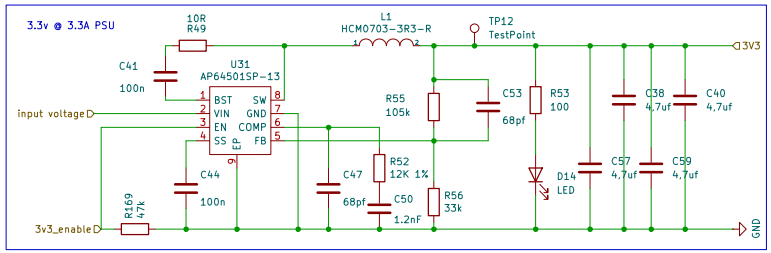

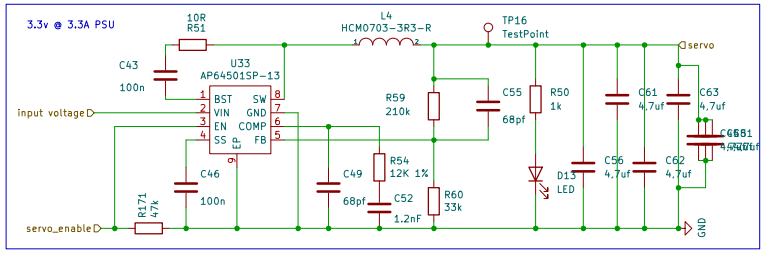

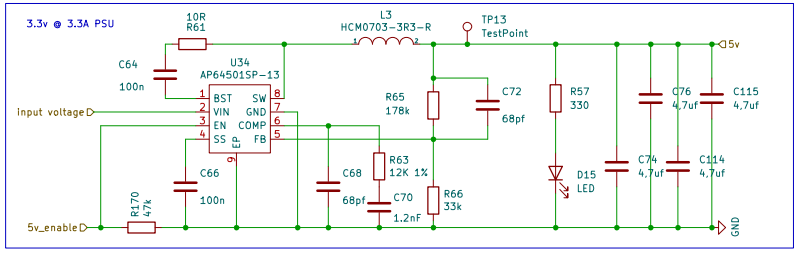

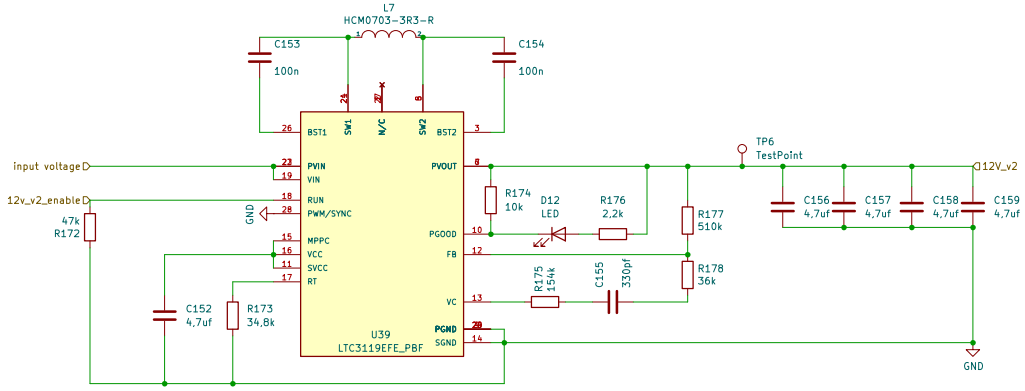

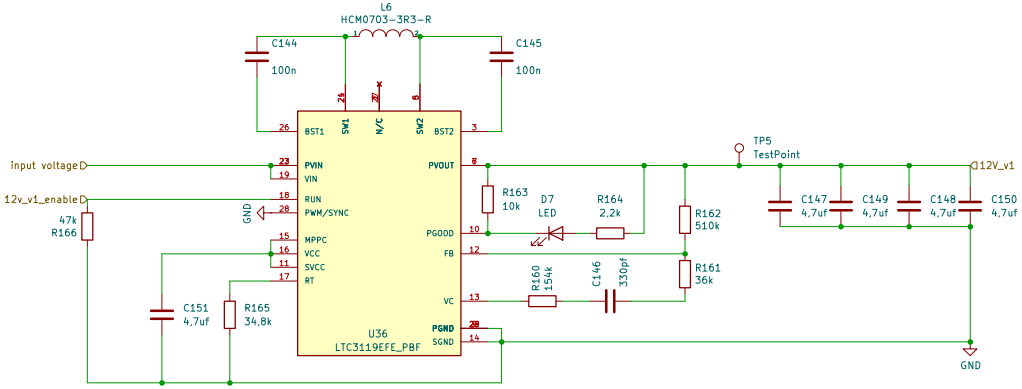

www.raspberrypi.com
© 2020–2022 Raspberry Pi Ltd (formerly Raspberry Pi (Trading) Ltd.)

Sheet: /PSUs/
File: PSUs.kicad_sch

Title: Compute Module 4 IO Board – PSUs

Size: A3	Date:	Rev:
KiCad E.D.A. 9.0.2		Id: 7/24

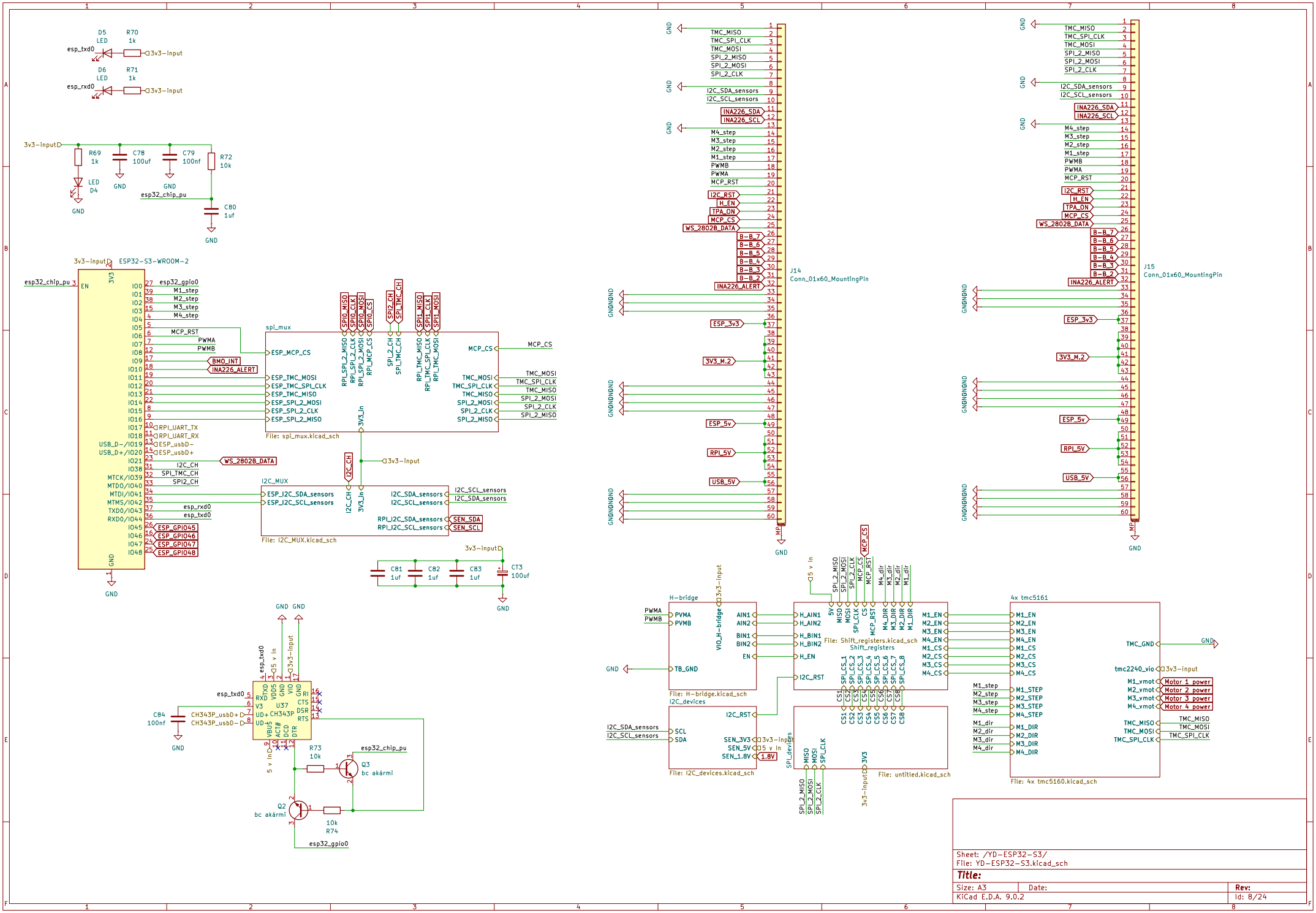
D5 LED R70 1k esp_txd0 3v3-input
D6 LED R71 1k esp_rxd0 3v3-input
3v3-input R69 1k C78 100uf C79 100nf R72 10k
LED D4
GND
esp32_chip_pu
C80 1uf
3v3-input ESP32-S3-WROOM-2
esp32_chip_pu EN
esp32_gpio0 M1_step M2_step M3_step M4_step
MCP_RST PWMA PWMB
BMO_INT INA226_ALERT
RPI_UART_TX RPI_UART_RX
ESP_usbD- ESP_usbD+
USB_D-/IO19 USB_D+/IO20
WS_2802B_DATA
I2C_CH SPI_TMC_CH SPI2_CH
esp_rxd0 esp_txd0
ESP_GPIO45 ESP_GPIO46 ESP_GPIO47 ESP_GPIO48
spi_mux
ESP_MCP_CS
ESP_TMC_MOSI ESP_TMC_SPI_CLK ESP_TMC_MISO ESP_SPI_2_MOSI ESP_SPI_2_CLK ESP_SPI_2_MISO
RPI_SPI_2_MISO RPI_SPI_2_CLK RPI_SPI_2_MOSI RPI_MCP_CS
SPI_CH SPI_TMC_CH
RPI_TMC_MISO RPI_TMC_SPI_CLK RPI_TMC_MOSI
MCP_CS
TMC_MOSI TMC_SPI_CLK TMC_MISO SPI_2_MOSI SPI_2_CLK SPI_2_MISO
File: spi_mux.kicad_sch
I2C_MUX
ESP_I2C_SDA_sensors ESP_I2C_SCL_sensors
I2C_SDA_sensors I2C_SCL_sensors
RPI_I2C_SDA_sensors RPI_I2C_SCL_sensors
SEN_SDA SEN_SCL
File: I2C_MUX.kicad_sch
C81 1uf C82 1uf C83 1uf CT3 100uf
GND GND
C84 100nf
CH343P_usbD+ CH343P_usbD-
esp_txd0
5 v in 3v3-input
R73 10k
Q3 bc akármi
Q2 bc akármi
10k R74
esp32_gpio0
J14 Conn_01x60_MountingPin
TMC_MISO TMC_SPI_CLK TMC_MOSI SPI_2_MISO SPI_2_MOSI SPI_2_CLK
I2C_SDA_sensors I2C_SCL_sensors
INA226_SDA INA226_SCL
M4_step M3_step M2_step M1_step PWMB PWMA MCP_RST
I2C_RST H_EN TPA_ON MCP_CS WS_2802B_DATA
B-B_7 B-B_6 B-B_5 B-B_4 B-B_3 B-B_2 INA226_ALERT
ESP_3v3 3V3_M.2 ESP_5v RPI_5V USB_5V
J15 Conn_01x60_MountingPin
H-bridge
PVMA PWMB TB_GND
AIN1 AIN2 BIN1 BIN2 EN
VIO_H-bridge 3v3-input
File: H-bridge.kicad_sch
File: Shift_registers.kicad_sch
Shift_registers
H_AIN1 H_AIN2 H_BIN1 H_BIN2 H_EN I2C_RST
M1_EN M2_EN M3_EN M4_EN M1_CS M2_CS M3_CS M4_CS
M1_dir M2_dir M3_dir M4_dir
I2C_devices
SCL SDA
SEN_3V3 SEN_5V SEN_1.8V
File: I2C_devices.kicad_sch
File: untitled.kicad_sch
4x tmc5161
M1_STEP M2_STEP M3_STEP M4_STEP
M1_DIR M2_DIR M3_DIR M4_DIR
TMC_GND tmc2240_vio
M1_vmot M2_vmot M3_vmot M4_vmot
Motor 1 power Motor 2 power Motor 3 power Motor 4 power
TMC_MISO TMC_MOSI TMC_SPI_CLK
File: 4x tmc5160.kicad_sch
Sheet: /YD-ESP32-S3/
File: YD-ESP32-S3.kicad_sch
Title:
Size: A3 Date: Rev:
KiCad E.D.A. 9.0.2 Id: 8/24

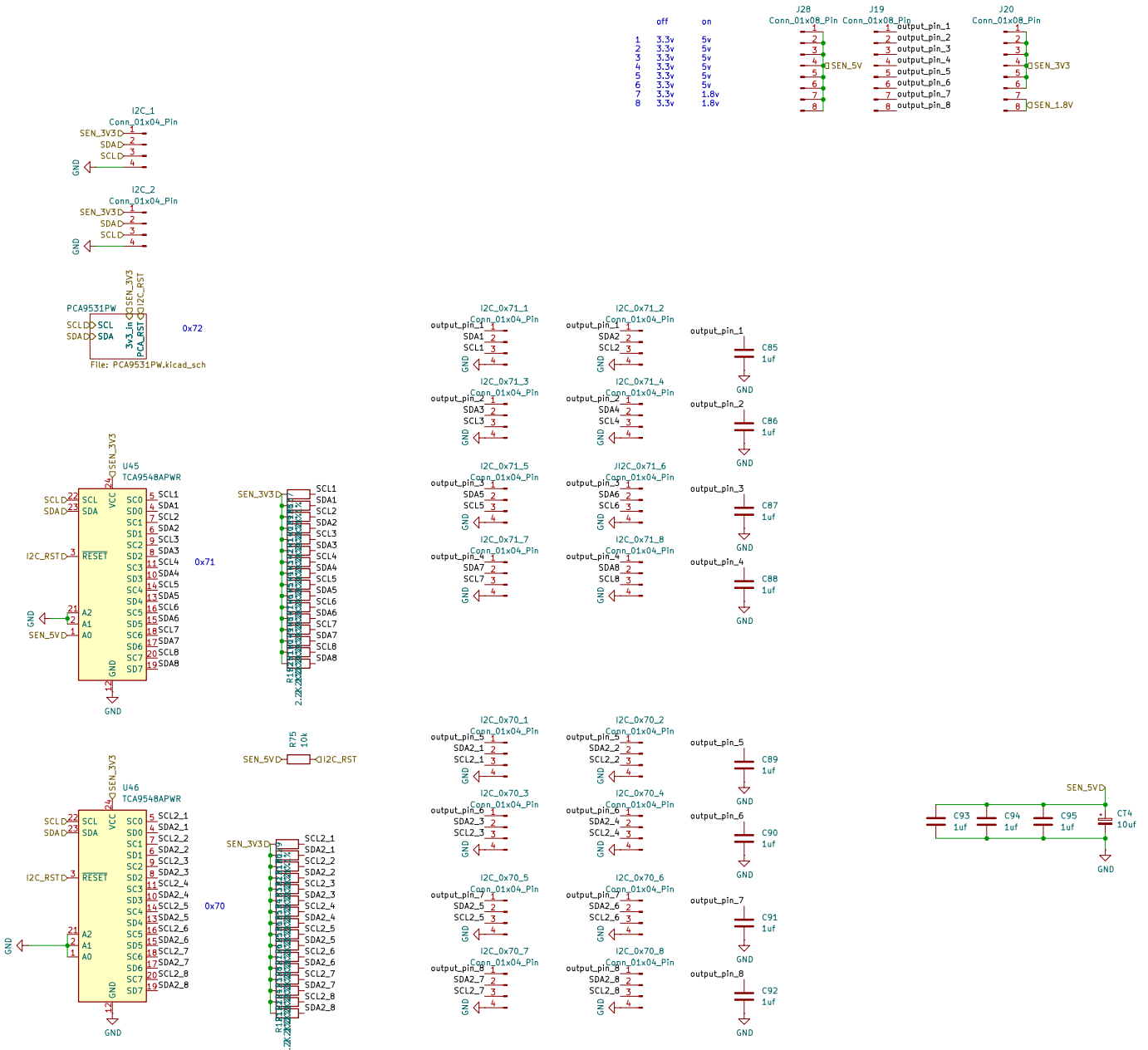

Sheet: /YD-ESP32-S3/I2C_devices/
File: I2C_devices.kicad_sch

Title:

Size: A3	Date:	Rev:
KiCad E.D.A. 9.0.2		Id: 10/24

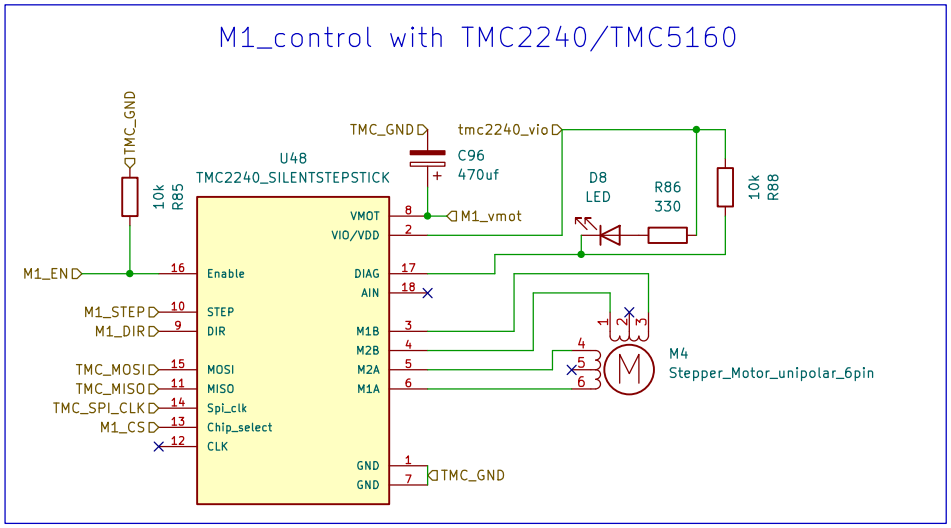

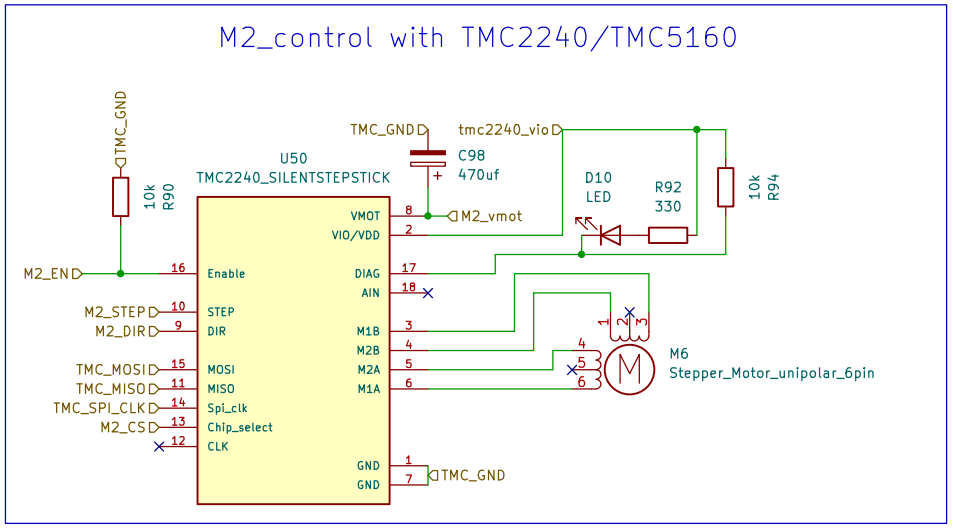

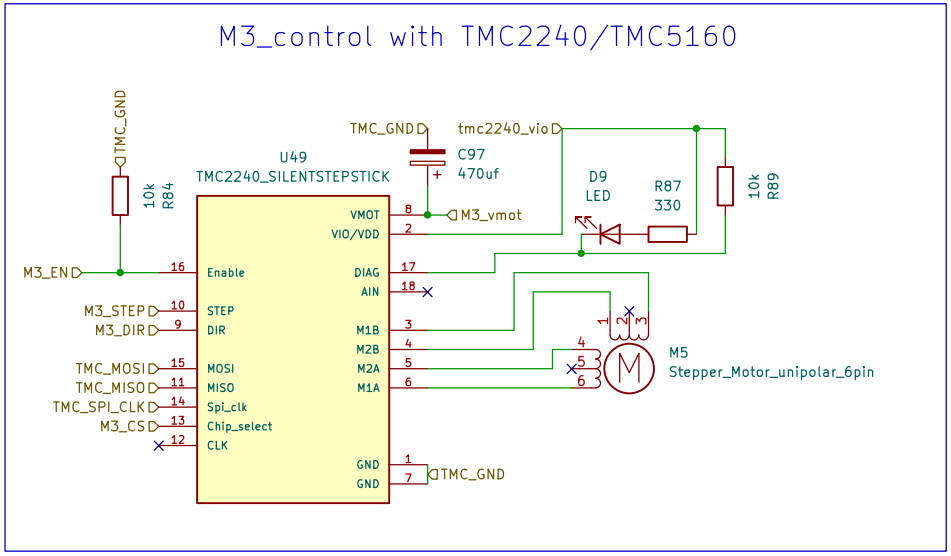

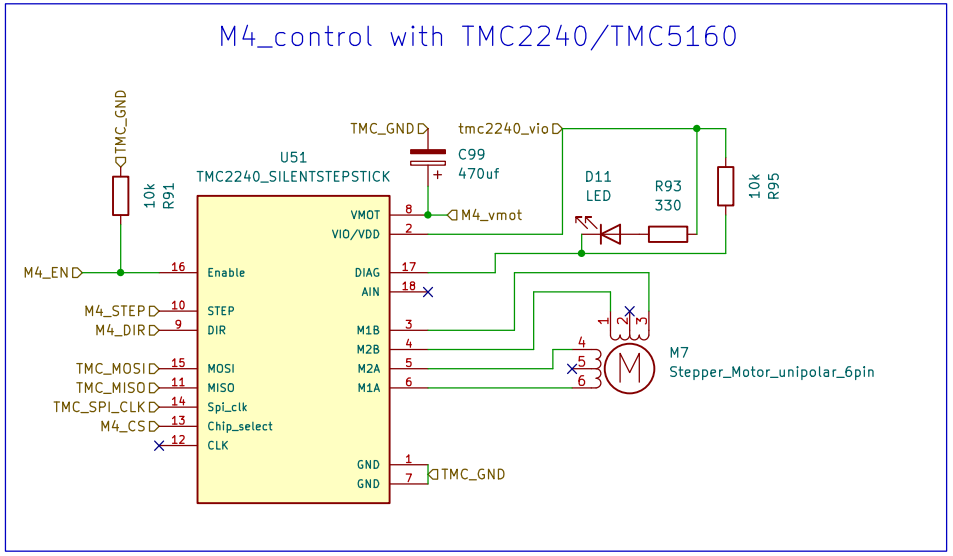

Sheet: /YD-ESP32-S3/4x tmc5161/
File: 4x tmc5160.kicad_sch

Title:

Size: A4	Date:	**Rev:**
KiCad E.D.A. 9.0.2		Id: 11/24

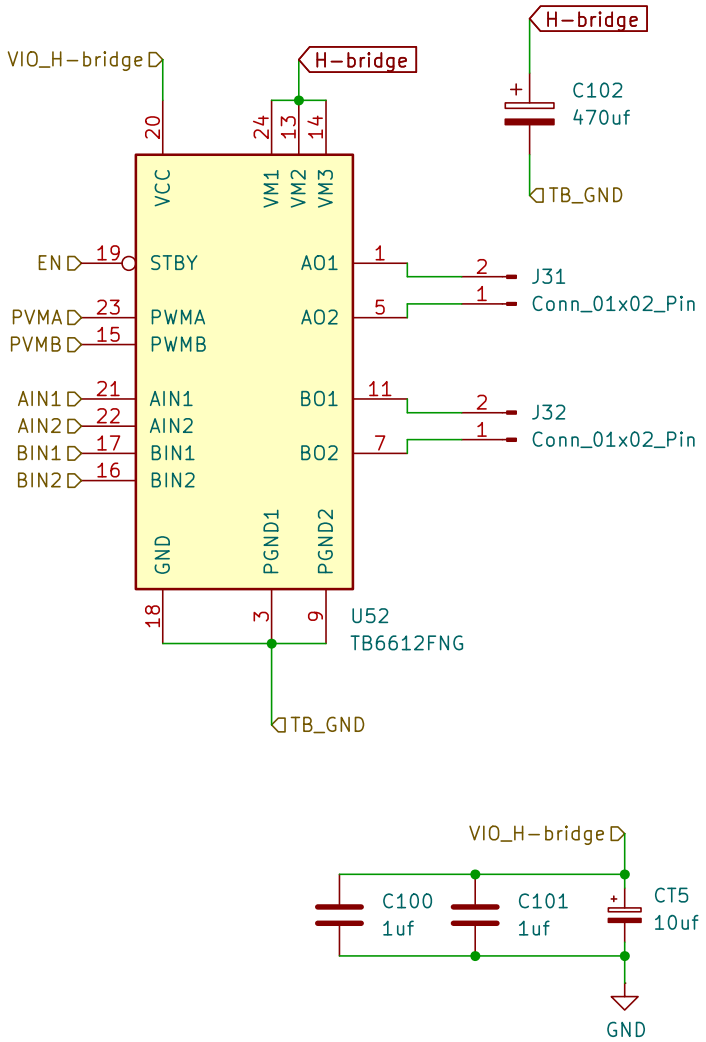


```
//motor A connected between A01 and A02
//motor B connected between B01 and B02

int STBY = 10; //standby

//Motor A
int PWMA = 3; //Speed control
int AIN1 = 9; //Direction
int AIN2 = 8; //Direction

//Motor B
int PWMB = 5; //Speed control
int BIN1 = 11; //Direction
int BIN2 = 12; //Direction

void setup(){
  pinMode(STBY, OUTPUT);

  pinMode(PWMA, OUTPUT);
  pinMode(AIN1, OUTPUT);
  pinMode(AIN2, OUTPUT);

  pinMode(PWMB, OUTPUT);
  pinMode(BIN1, OUTPUT);
  pinMode(BIN2, OUTPUT);
}

void loop(){
  move(1, 255, 1); //motor 1, full speed, left
  move(2, 255, 1); //motor 2, full speed, left

  delay(1000); //go for 1 second
  stop(); //stop
  delay(250); //hold for 250ms until move again

  move(1, 128, 0); //motor 1, half speed, right
  move(2, 128, 0); //motor 2, half speed, right

  delay(1000);
  stop();
  delay(250);
}
```

```
void move(int motor, int speed, int direction){
//Move specific motor at speed and direction
//motor: 0 for B 1 for A
//speed: 0 is off, and 255 is full speed
//direction: 0 clockwise, 1 counter-clockwise

  digitalWrite(STBY, HIGH); //disable standby

  boolean inPin1 = LOW;
  boolean inPin2 = HIGH;

  if(direction == 1){
    inPin1 = HIGH;
    inPin2 = LOW;
  }

  if(motor == 1){
    digitalWrite(AIN1, inPin1);
    digitalWrite(AIN2, inPin2);
    analogWrite(PWMA, speed);
  }else{
    digitalWrite(BIN1, inPin1);
    digitalWrite(BIN2, inPin2);
    analogWrite(PWMB, speed);
  }
}

void stop(){
//enable standby
  digitalWrite(STBY, LOW);
}
```

Sheet: /YD-ESP32-S3/H-bridge/
File: H-bridge.kicad_sch

Title:

Size: A5	Date:	**Rev:**
KiCad E.D.A. 9.0.2		Id: 12/24

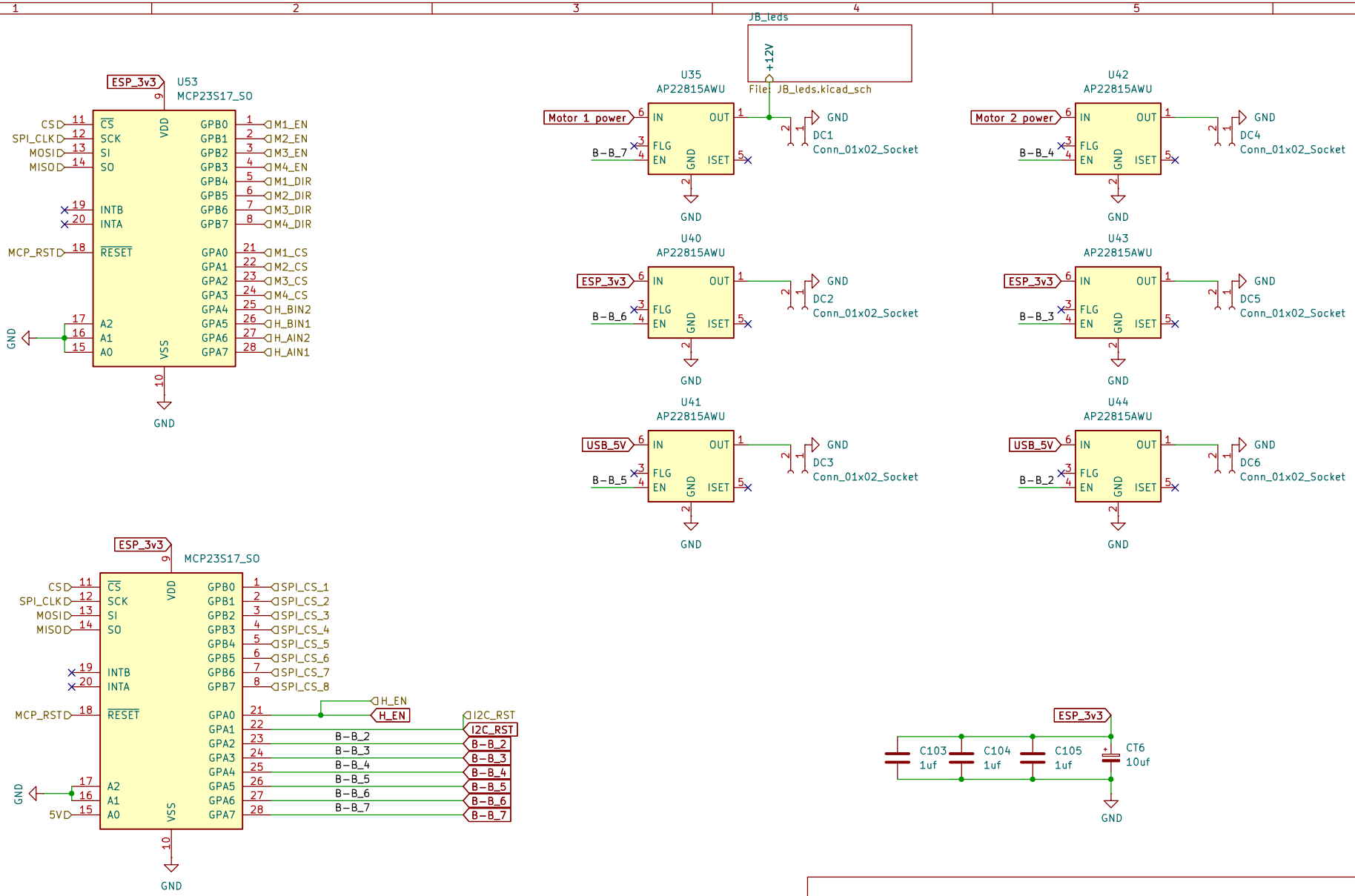

Sheet: /YD-ESP32-S3/Shift_registers/
File: Shift_registers.kicad_sch

Title:

Size: A4	Date:	Rev:
KiCad E.D.A. 9.0.2		Id: 13/24

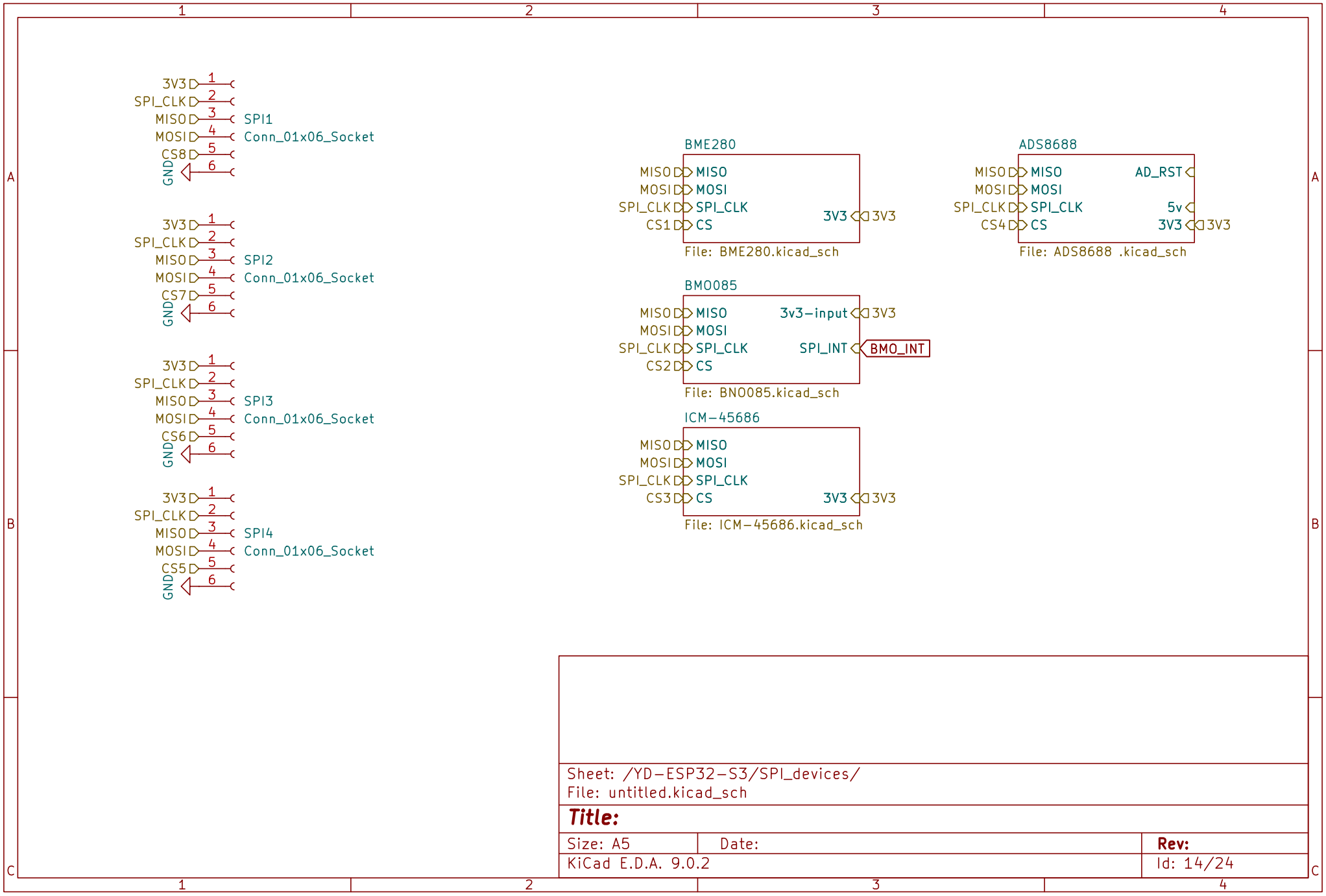
3V3
SPI_CLK
MISO
MOSI
CS8
GND
SPI1
Conn_01x06_Socket
CS7
SPI2
CS6
SPI3
CS5
SPI4
BME280
MISO
MOSI
SPI_CLK
CS1
CS
3V3
File: BME280.kicad_sch
ADS8688
AD_RST
5v
CS4
File: ADS8688 .kicad_sch
BMO085
3v3-input
SPI_INT
BMO_INT
CS2
File: BNO085.kicad_sch
ICM-45686
CS3
File: ICM-45686.kicad_sch
Sheet: /YD-ESP32-S3/SPI_devices/
File: untitled.kicad_sch
Title:
Size: A5
Date:
Rev:
KiCad E.D.A. 9.0.2
Id: 14/24

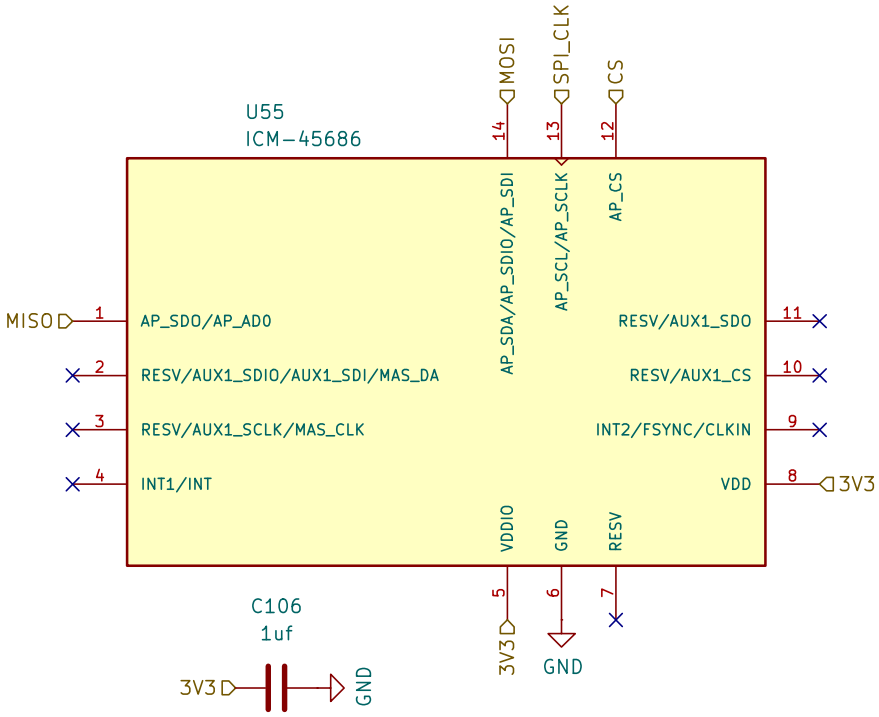

Sheet: /YD-ESP32-S3/SPI_devices/ICM-45686/
File: ICM-45686.kicad_sch

Title:

Size: A5	Date:	**Rev:**
KiCad E.D.A. 9.0.2		Id: 15/24

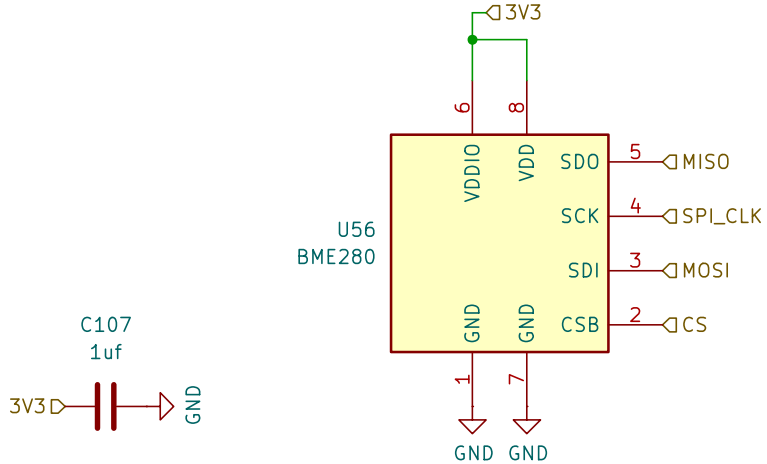

Sheet: /YD-ESP32-S3/SPI_devices/BME280/
File: BME280.kicad_sch

Title:

Size: A5	Date:	**Rev:**
KiCad E.D.A. 9.0.2		Id: 16/24

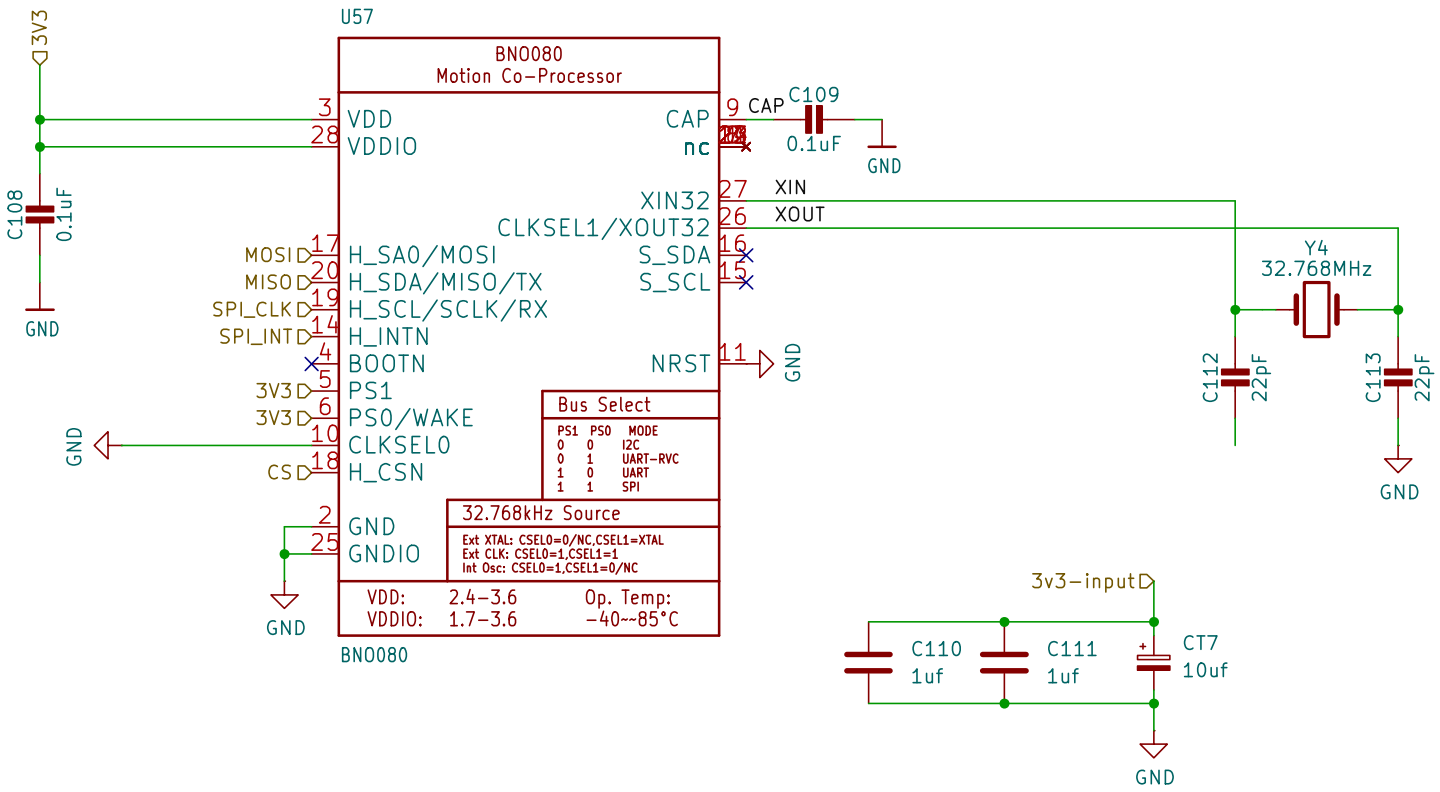

Sheet: /YD-ESP32-S3/SPI_devices/BMO085/
File: BNO085.kicad_sch

Title:

Size: A5	Date:	**Rev:**
KiCad E.D.A. 9.0.2		Id: 17/24

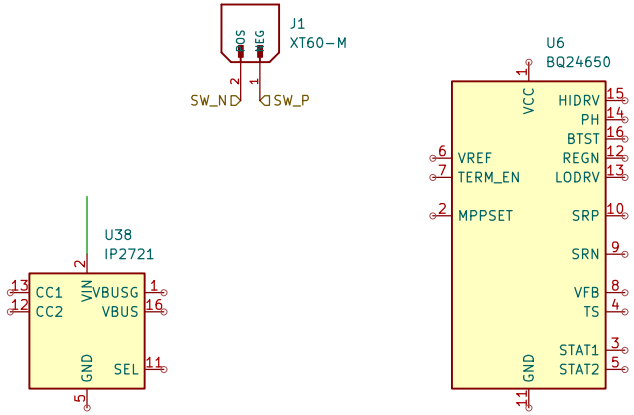

Sheet: /Battery-circuit/
File: Battery-circuit.kicad_sch

Title:

Size: A4	Date:	Rev:
KiCad E.D.A. 9.0.2		Id: 19/24

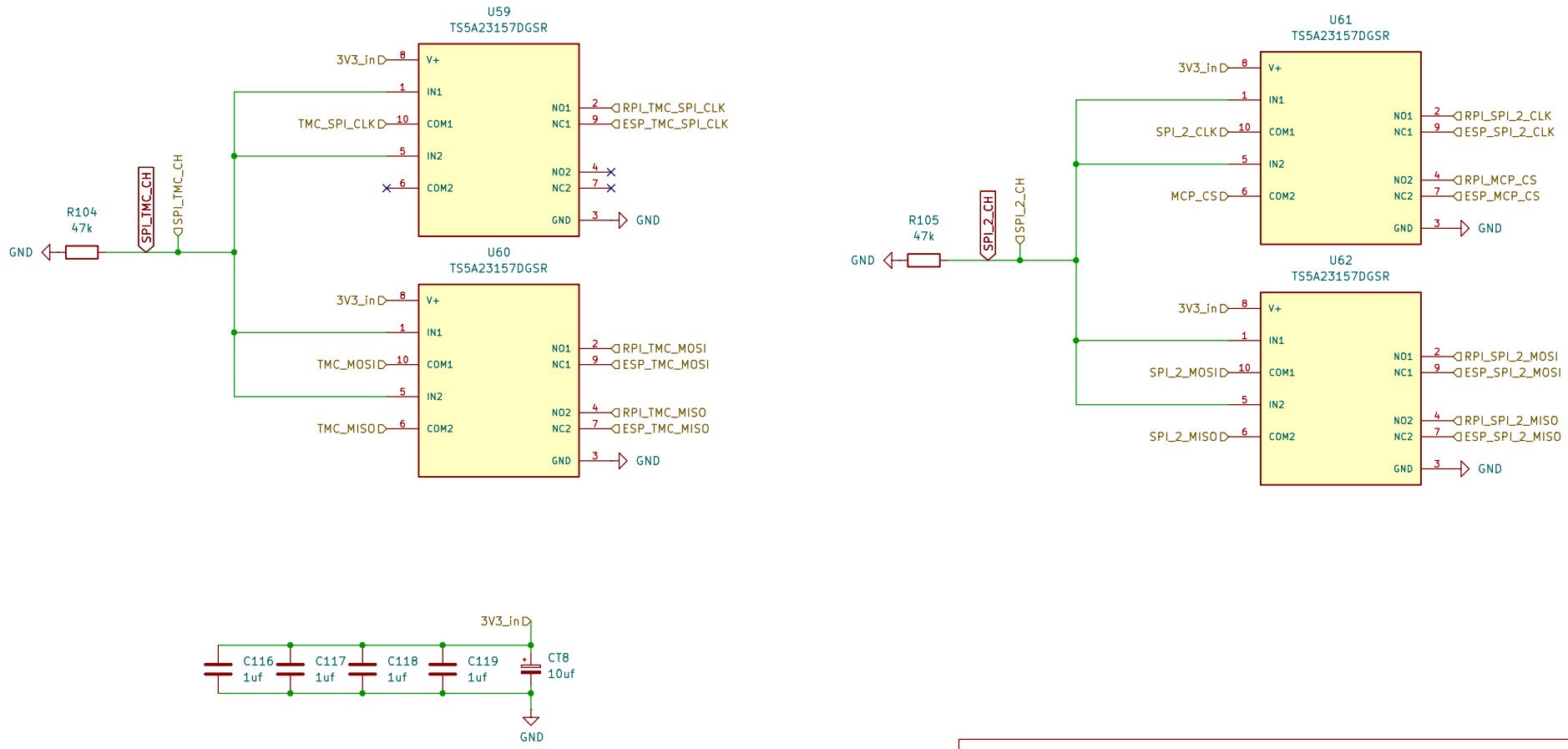

Sheet: /YD-ESP32-S3/spi_mux/
File: spi_mux.kicad_sch

Title:

Size: A4	Date:	Rev:
KiCad E.D.A. 9.0.2		Id: 20/24

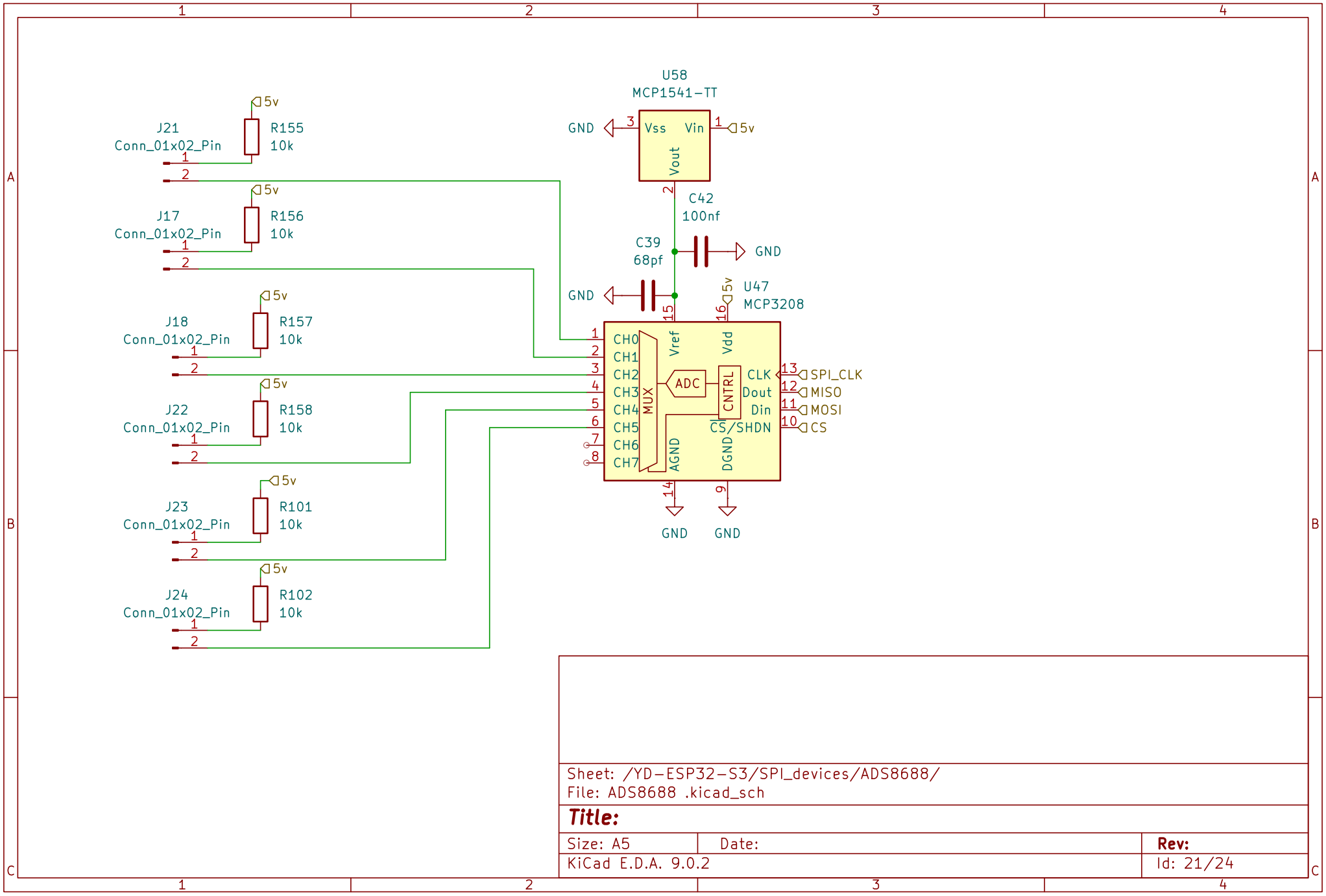

Sheet: /YD-ESP32-S3/SPI_devices/ADS8688/
File: ADS8688 .kicad_sch

Title:

Size: A5	Date:	**Rev:**
KiCad E.D.A. 9.0.2		Id: 21/24

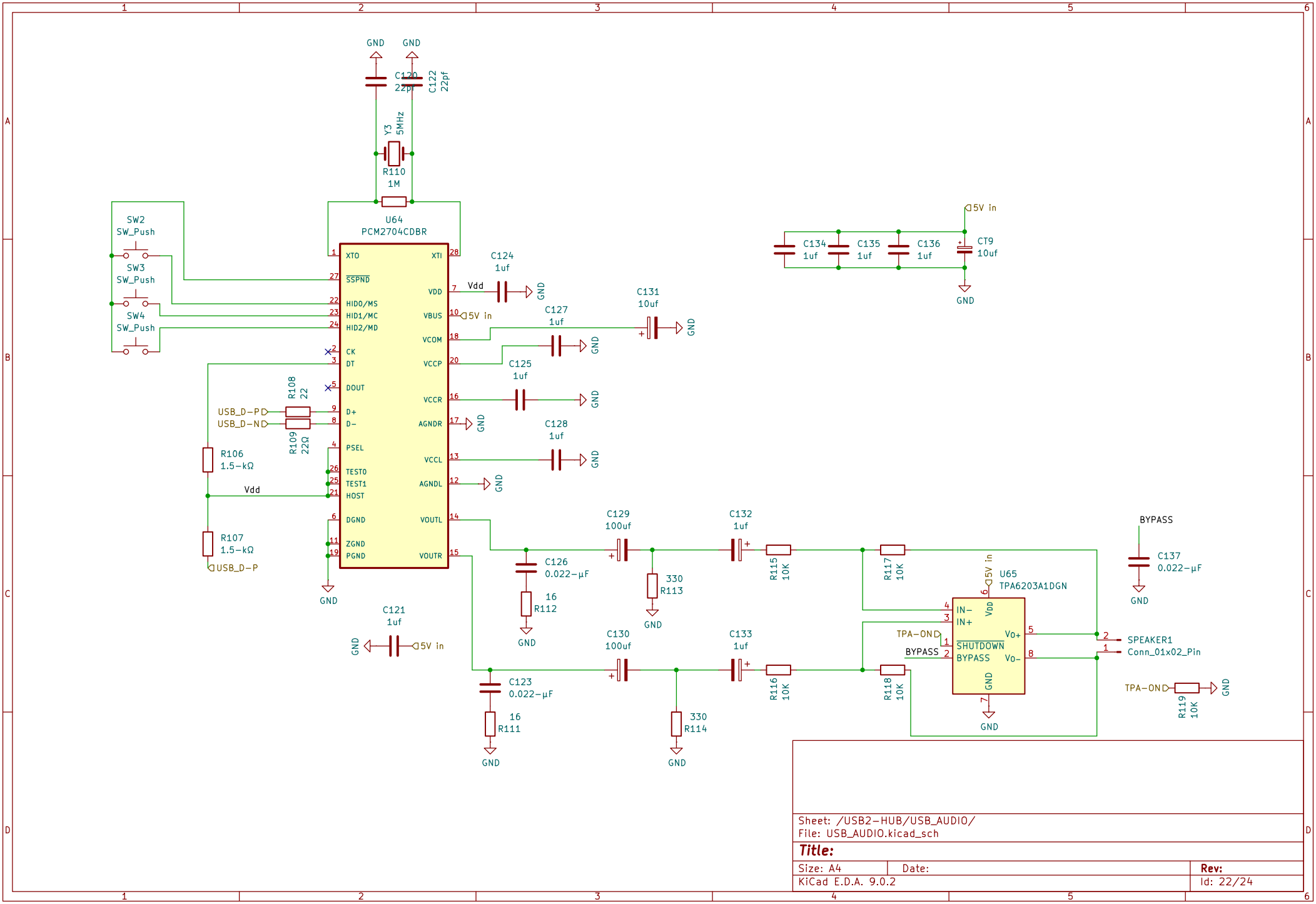

Sheet: /USB2−HUB/USB_AUDIO/
File: USB_AUDIO.kicad_sch

Title:

Size: A4	Date:	Rev:
KiCad E.D.A. 9.0.2		Id: 22/24

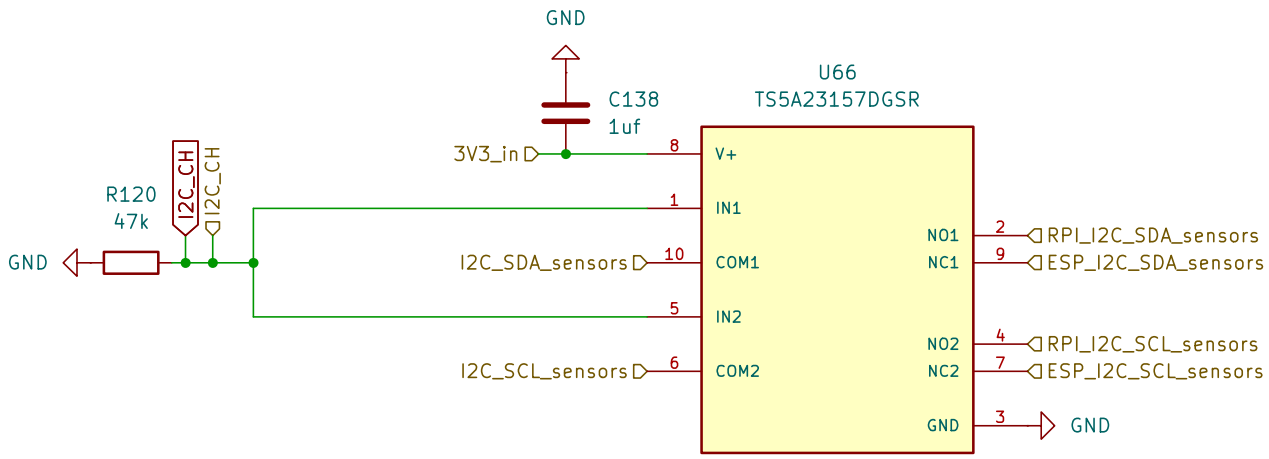

Sheet: /YD-ESP32-S3/I2C_MUX/
File: I2C_MUX.kicad_sch

Title:

Size: A5	Date:	**Rev:**
KiCad E.D.A. 9.0.2		Id: 22/24

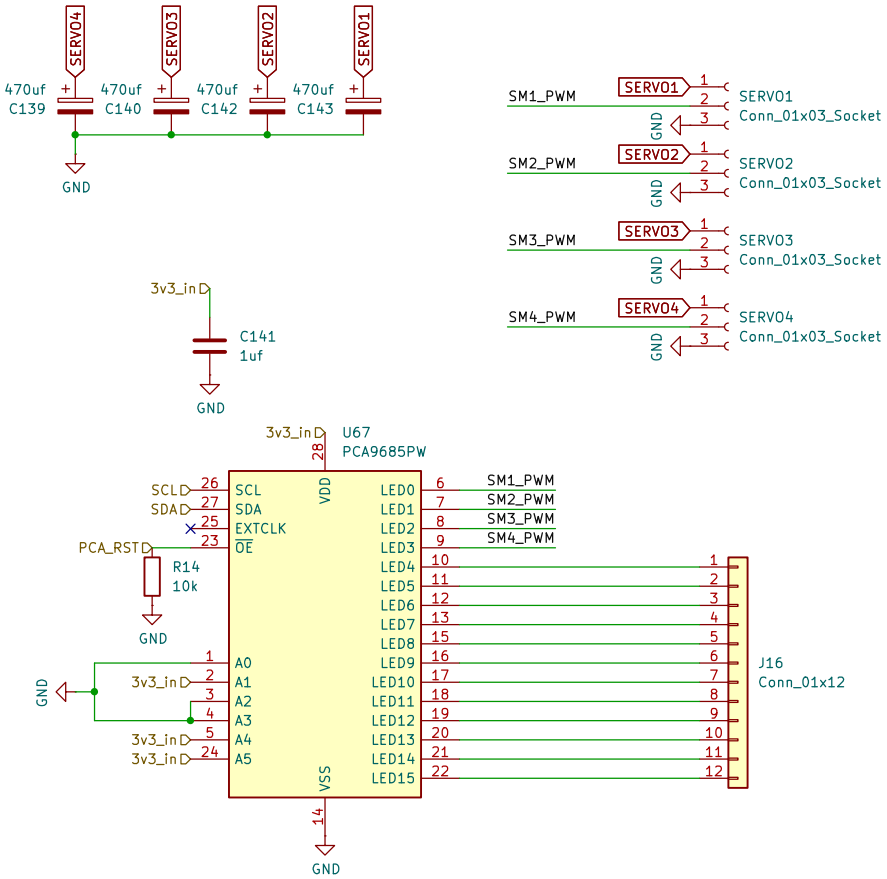

Sheet: /YD-ESP32-S3/I2C_devices/PCA9531PW/
File: PCA9531PW.kicad_sch

Title:

Size: A4	Date:	Rev:
KiCad E.D.A. 9.0.2		Id: 23/24

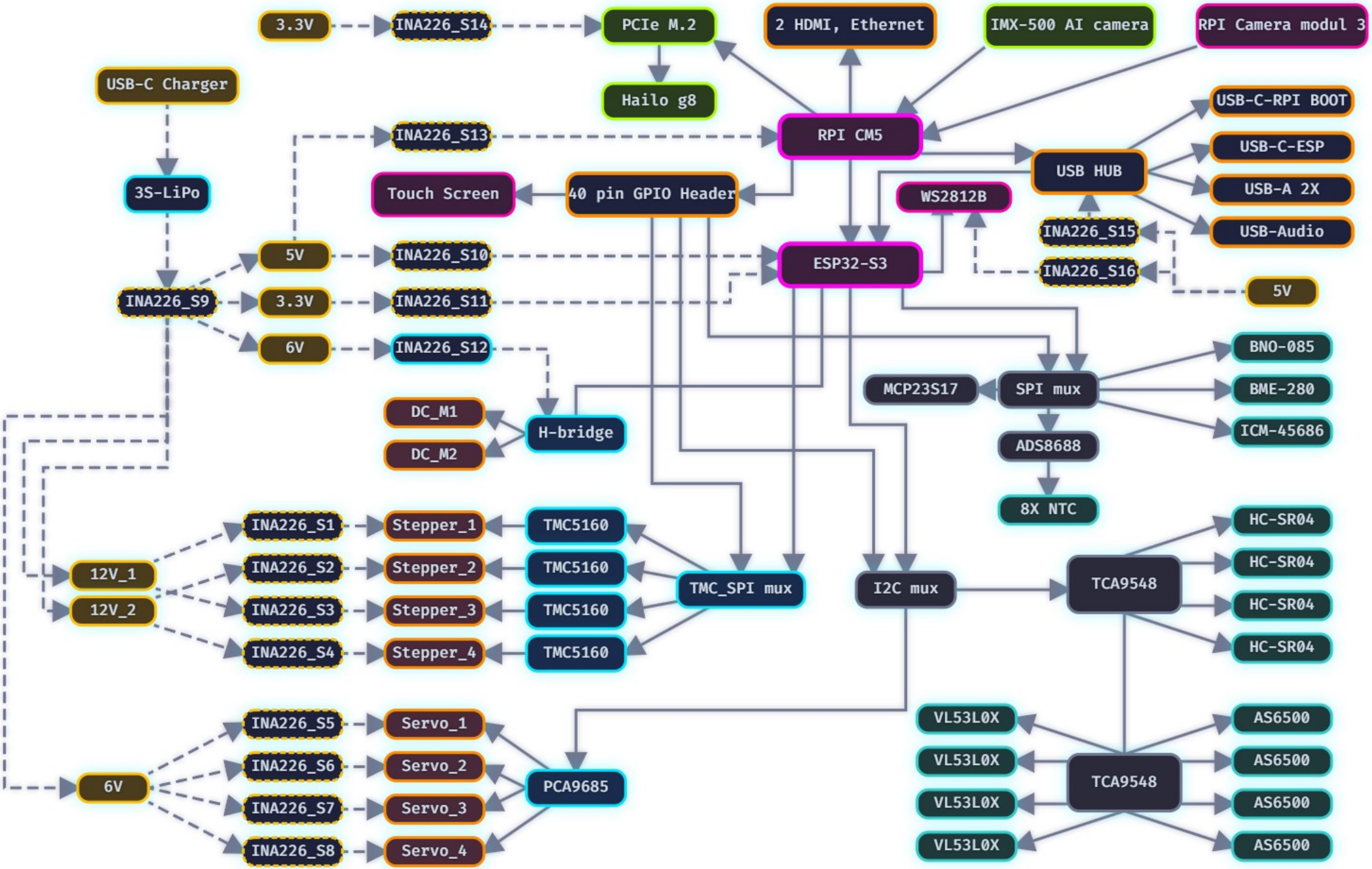
3.3V
INA226_S14
PCIe M.2
2 HDMI, Ethernet
IMX-500 AI camera
RPI Camera modul 3
USB-C Charger
Hailo g8
USB-C-RPI BOOT
INA226_S13
RPI CM5
USB-C-ESP
USB HUB
3S-LiPo
Touch Screen
40 pin GPIO Header
USB-A 2X
WS2812B
INA226_S15
USB-Audio
5V
INA226_S10
ESP32-S3
INA226_S16
INA226_S9
3.3V
INA226_S11
5V
6V
INA226_S12
BNO-085
MCP23S17
SPI mux
BME-280
DC_M1
H-bridge
ICM-45686
DC_M2
ADS8688
8X NTC
INA226_S1
Stepper_1
TMC5160
HC-SR04
12V_1
INA226_S2
Stepper_2
TMC5160
TMC_SPI mux
I2C mux
TCA9548
HC-SR04
12V_2
INA226_S3
Stepper_3
TMC5160
HC-SR04
INA226_S4
Stepper_4
TMC5160
HC-SR04
INA226_S5
Servo_1
VL53L0X
AS6500
INA226_S6
Servo_2
VL53L0X
TCA9548
AS6500
6V
PCA9685
INA226_S7
Servo_3
VL53L0X
AS6500
INA226_S8
Servo_4
VL53L0X
AS6500

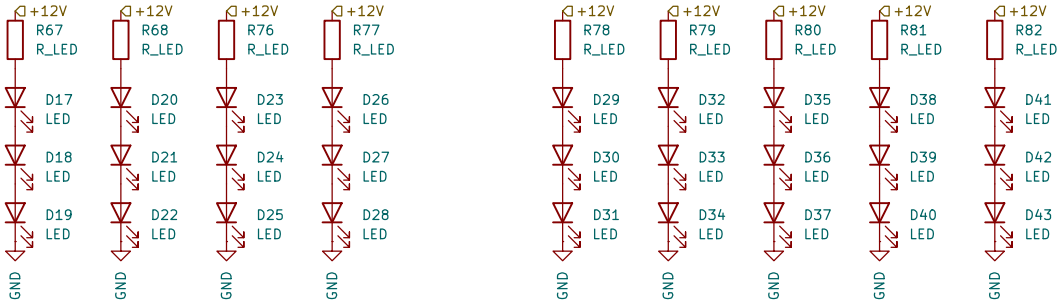

Sheet: /YD-ESP32-S3/Shift_registers/JB_leds/
File: JB_leds.kicad_sch

Title:

Size: A4	Date:	**Rev:**
KiCad E.D.A. 9.0.2		Id: 24/24